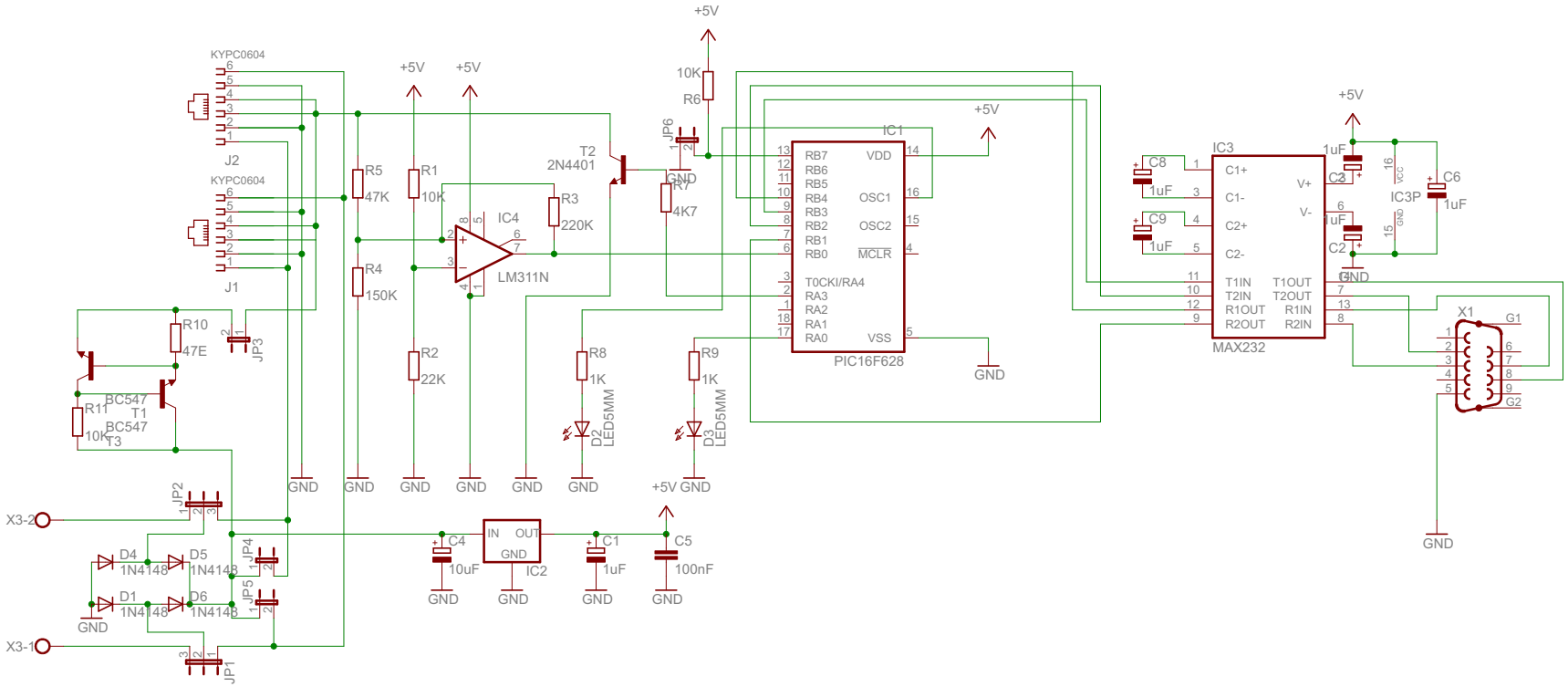
KYPC0604
J2
KYPC0604
J1
R10
47E
JP3
R11
10K
BC547
T1
BC547
T3
X3-2
X3-1
JP2
JP1
D4
1N4148
D5
1N4148
D1
1N4148
D6
1N4148
JP4
JP5
GND
R5
47K
R4
150K
+5V
+5V
R1
10K
R2
22K
IC4
LM311N
R3
220K
T2
2N4401
JP6
R7
4K7
10K
R6
R8
1K
D2
LED5MM
R9
1K
D3
LED5MM
+5V
IC1
RB7
RB6
RB5
RB4
RB3
RB2
RB1
RB0
T0CKI/RA4
RA3
RA2
RA1
RA0
VDD
OSC1
OSC2
MCLR
VSS
PIC16F628
+5V
GND
C4
10uF
IN
OUT
GND
IC2
C1
1uF
C5
100nF
C8
1uF
C9
1uF
IC3
C1+
C1-
C2+
C2-
V+
V-
T1IN
T2IN
R1OUT
R2OUT
T1OUT
T2OUT
R1IN
R2IN
MAX232
1uF
C3
1uF
C2
IC3P
C6
1uF
X1
G1
G2
GND